US005450900A

United States Patent [19]

Schalla et al.

[11] Patent Number: 5,450,900

[45] Date of Patent: Sep. 19, 1995

[54] WELL FLUID ISOLATION AND SAMPLE APPARATUS AND METHOD

[75] Inventors: **Ronald Schalla**, Kennewick; **Ronald M. Smith**, Richland; **Stephen H. Hall**, Kennewick; **John E. Smart**, Richland, all of Wash.

[73] Assignee: **Battelle Memorial Institute**, Richland, Wash.

[21] Appl. No.: **271,609**

[22] Filed: **Jul. 7, 1994**

Related U.S. Application Data

[63] Continuation-in-part of Ser. No. 112,726, Aug. 26, 1993, abandoned.

[51] **Int. Cl.**[6] **E21B 43/00**

[52] **U.S. Cl.** **166/264**; 166/369

[58] **Field of Search** 166/264, 268–269, 166/386, 387, 368, 369

[56] **References Cited**

U.S. PATENT DOCUMENTS

3,703,926	11/1972	Roeder	166/369 X
4,766,955	8/1988	Petermann	166/264 X
4,776,401	10/1988	Dollison	166/369
4,903,765	2/1990	Zunkel	166/264 X
4,940,088	7/1990	Goldschild	166/264 X
5,189,909	3/1993	Oike et al.	166/264 X
5,293,934	3/1994	Burge et al.	166/264 X
5,372,200	12/1994	Merrill, Jr.	166/369

Primary Examiner—Michael Powell Buiz
Attorney, Agent, or Firm—Paul W. Zimmerman

[57] **ABSTRACT**

The present invention specifically permits purging and/or sampling of a well but only removing, at most, about 25% of the fluid volume compared to conventional methods and, at a minimum, removing none of the fluid volume from the well.

The invention is an isolation assembly that is inserted into the well. The isolation assembly is designed so that only a volume of fluid between the outside diameter of the isolation assembly and the inside diameter of the well over a fluid column height from the bottom of the well to the top of the active portion (lower annulus) is removed. A seal may be positioned above the active portion thereby sealing the well and preventing any mixing or contamination of inlet fluid with fluid above the packer. Purged well fluid is stored in a riser above the packer. Ports in the wall of the isolation assembly permit purging and sampling of the lower annulus along the height of the active portion.

20 Claims, 11 Drawing Sheets

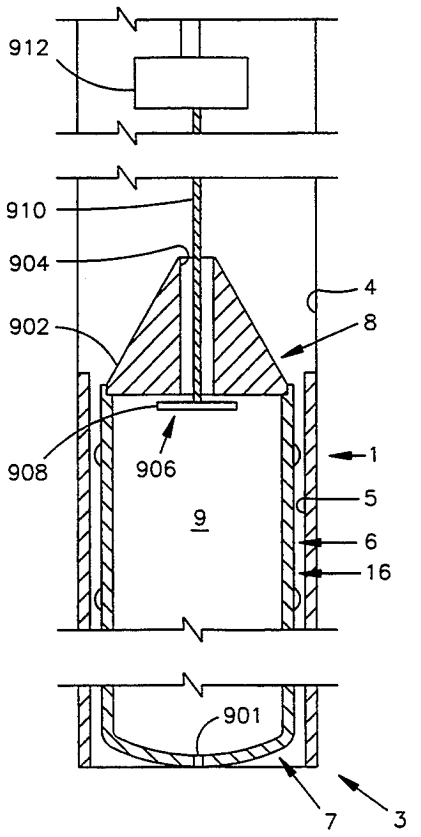

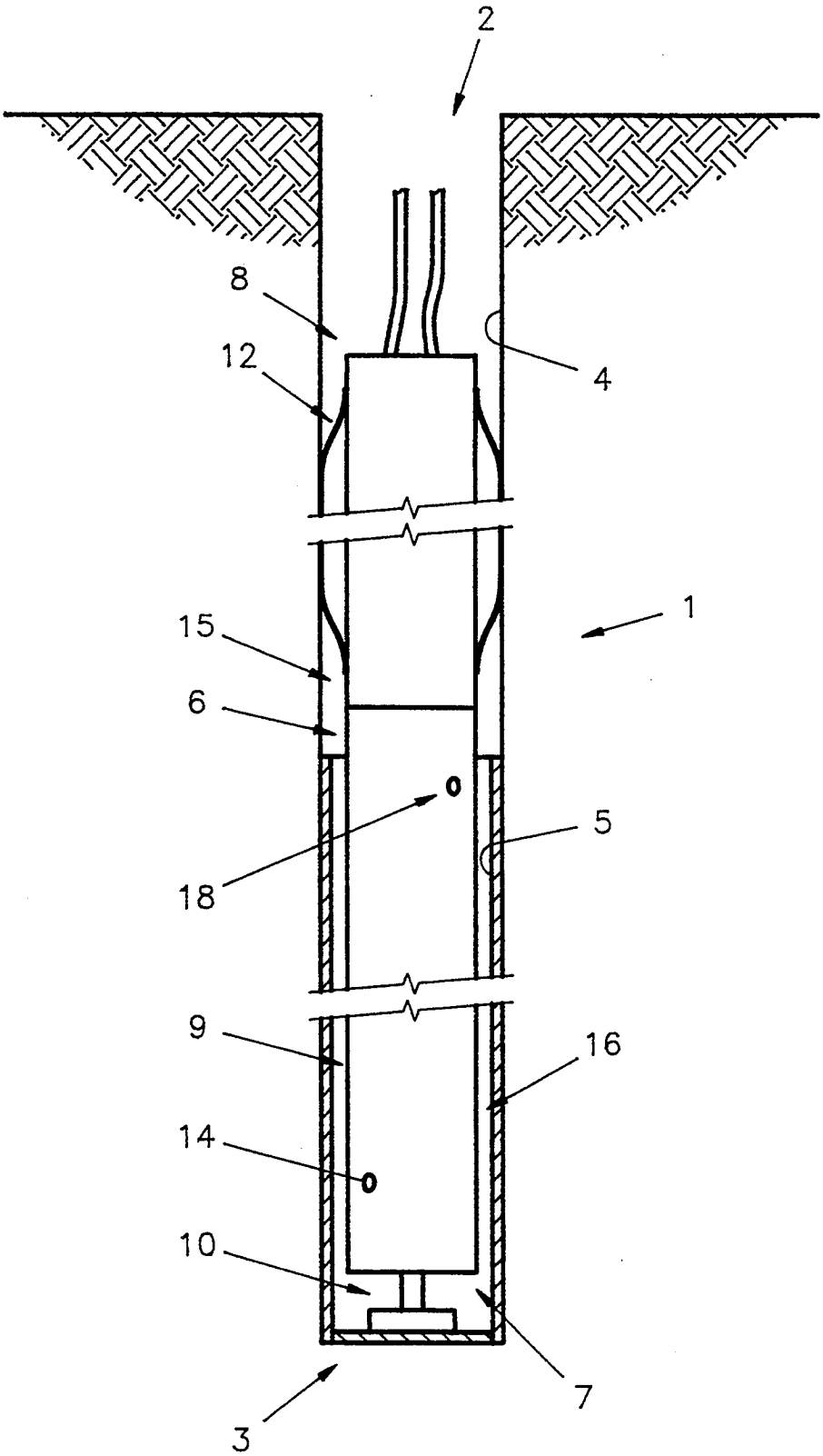

FIGURE 1

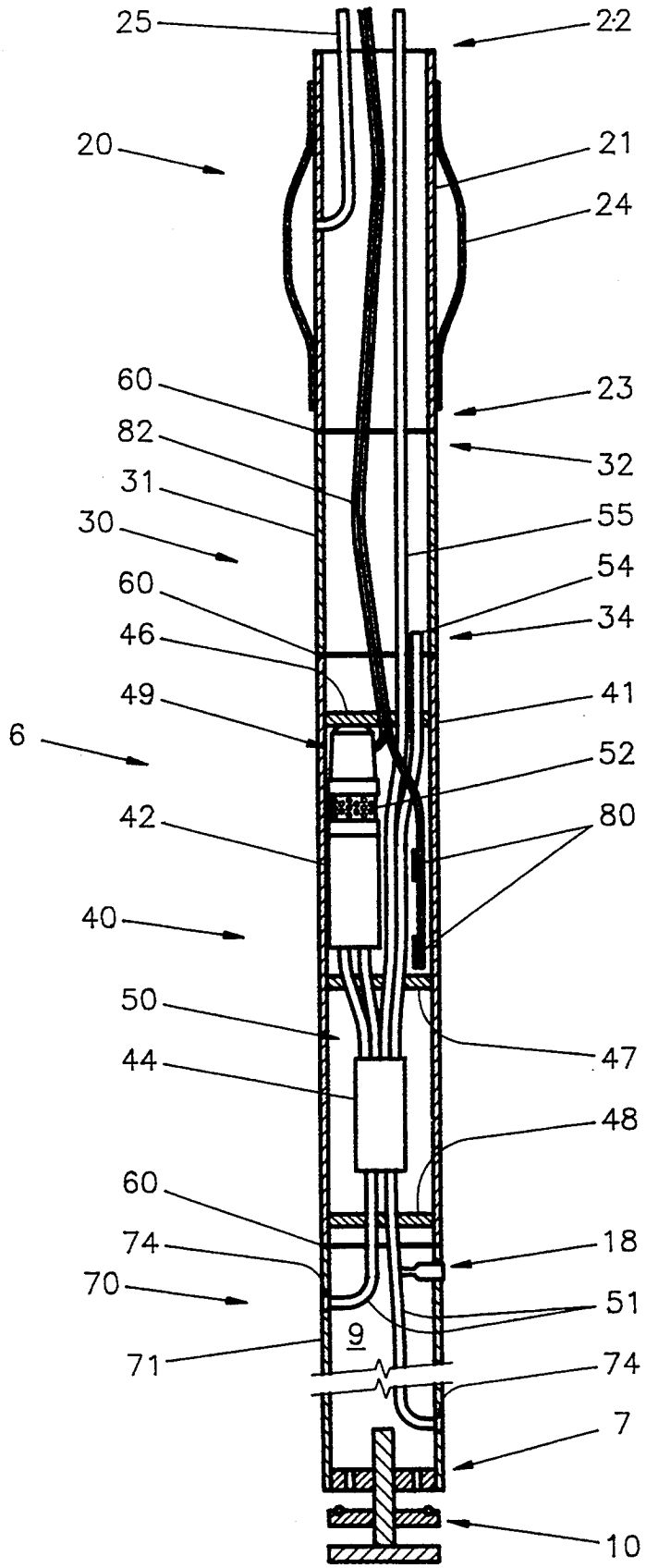
25
22
20
21
24
60
23
82
32
31
55
30
54
60
34
46
41
49
6
52
42
80
40
50
47
44
48
60
74
18
70
51
9
71
74
7
10

FIGURE 2

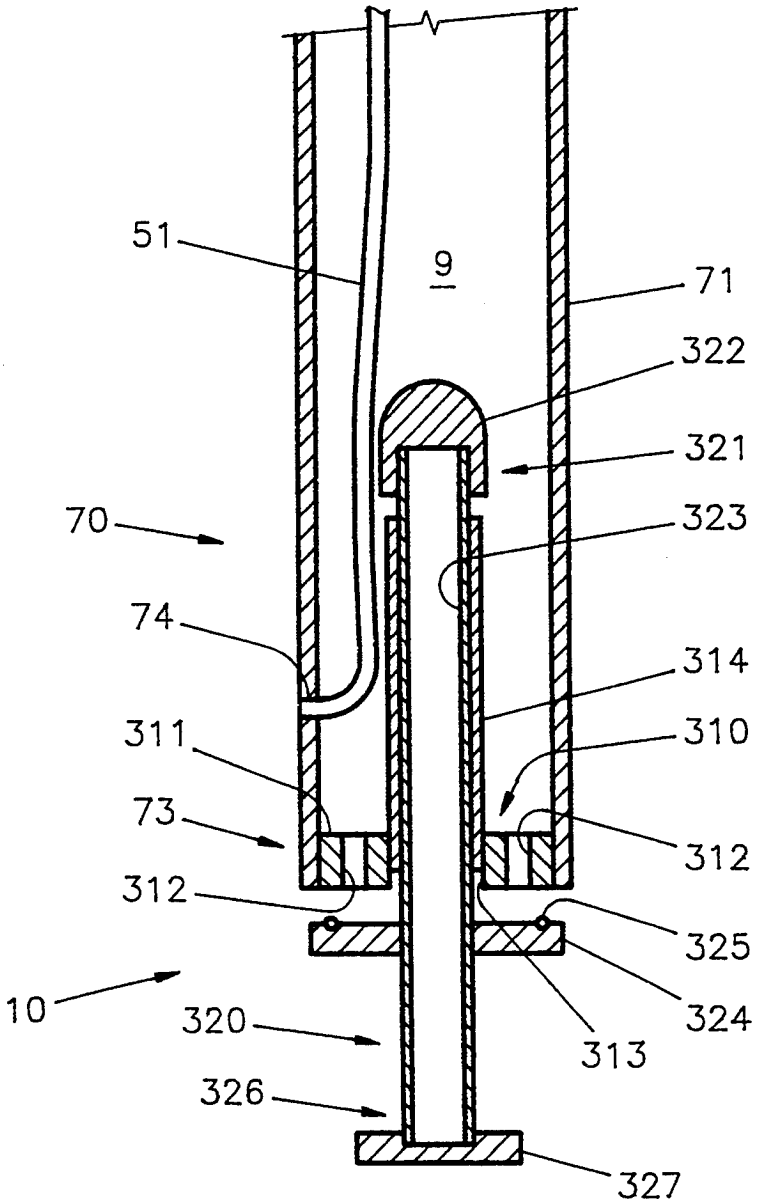
51
9
71
322
321
70
323
74
314
311
310
73
312
312
325
10
324
320
313
326
327

FIGURE 3

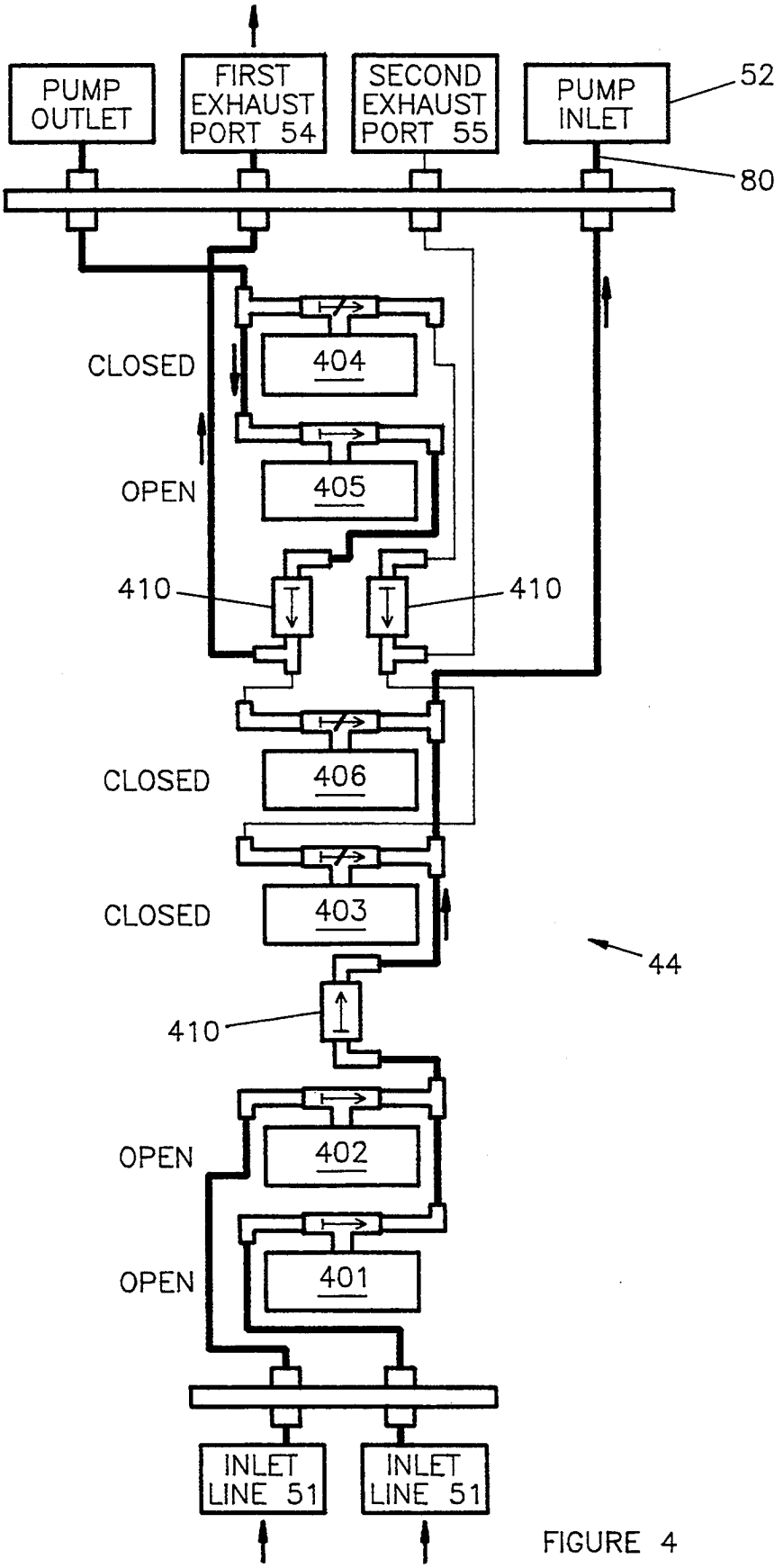
PUMP OUTLET
FIRST EXHAUST PORT 54
SECOND EXHAUST PORT 55
PUMP INLET
52
80
CLOSED
404
OPEN
405
410
410
CLOSED
406
CLOSED
403
44
410
OPEN
402
OPEN
401
INLET LINE 51
INLET LINE 51

FIGURE 4

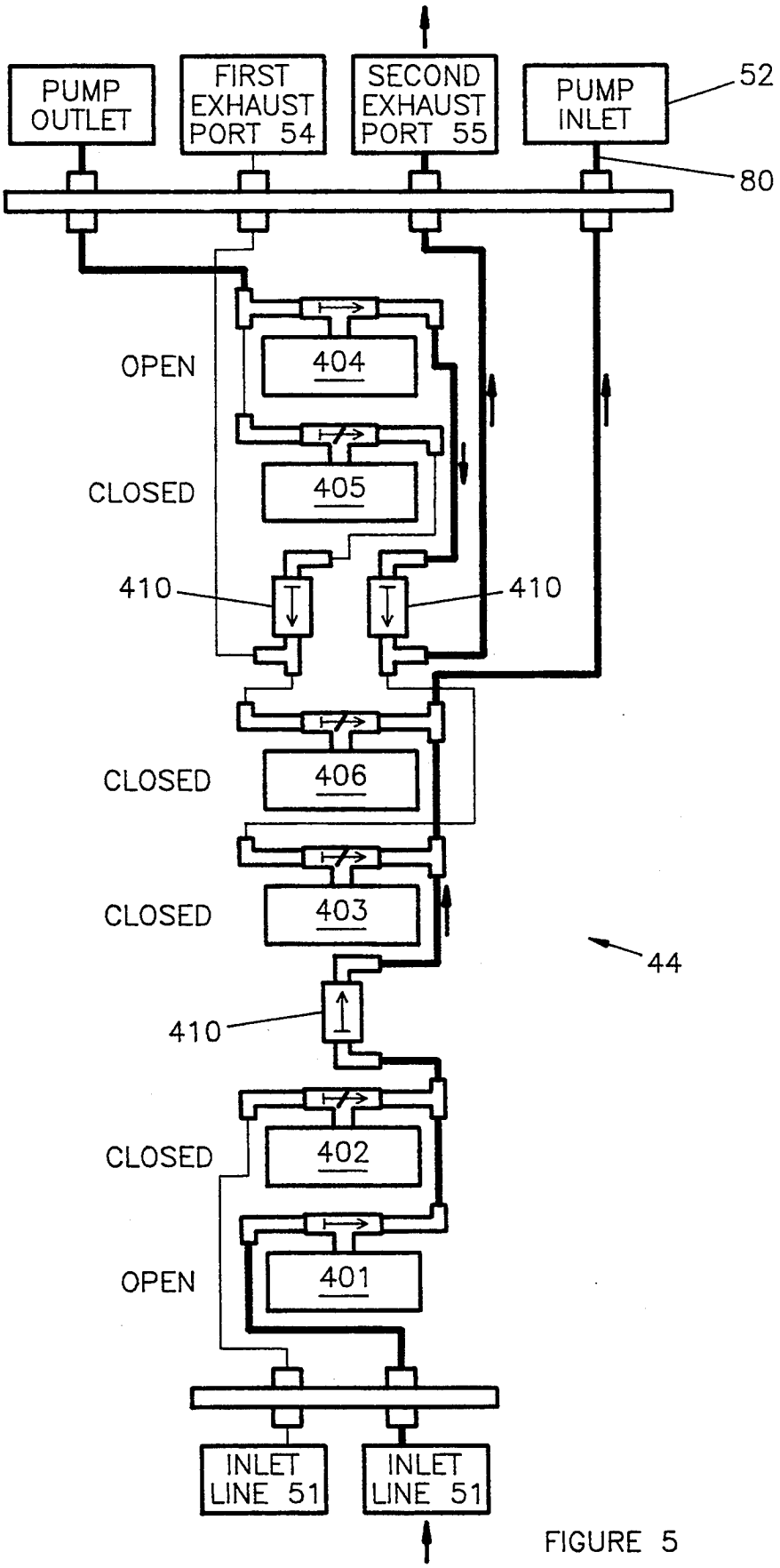
PUMP OUTLET
FIRST EXHAUST PORT 54
SECOND EXHAUST PORT 55
PUMP INLET
52
80
OPEN
404
CLOSED
405
410
410
CLOSED
406
CLOSED
403
44
410
CLOSED
402
OPEN
401
INLET LINE 51
INLET LINE 51

FIGURE 5

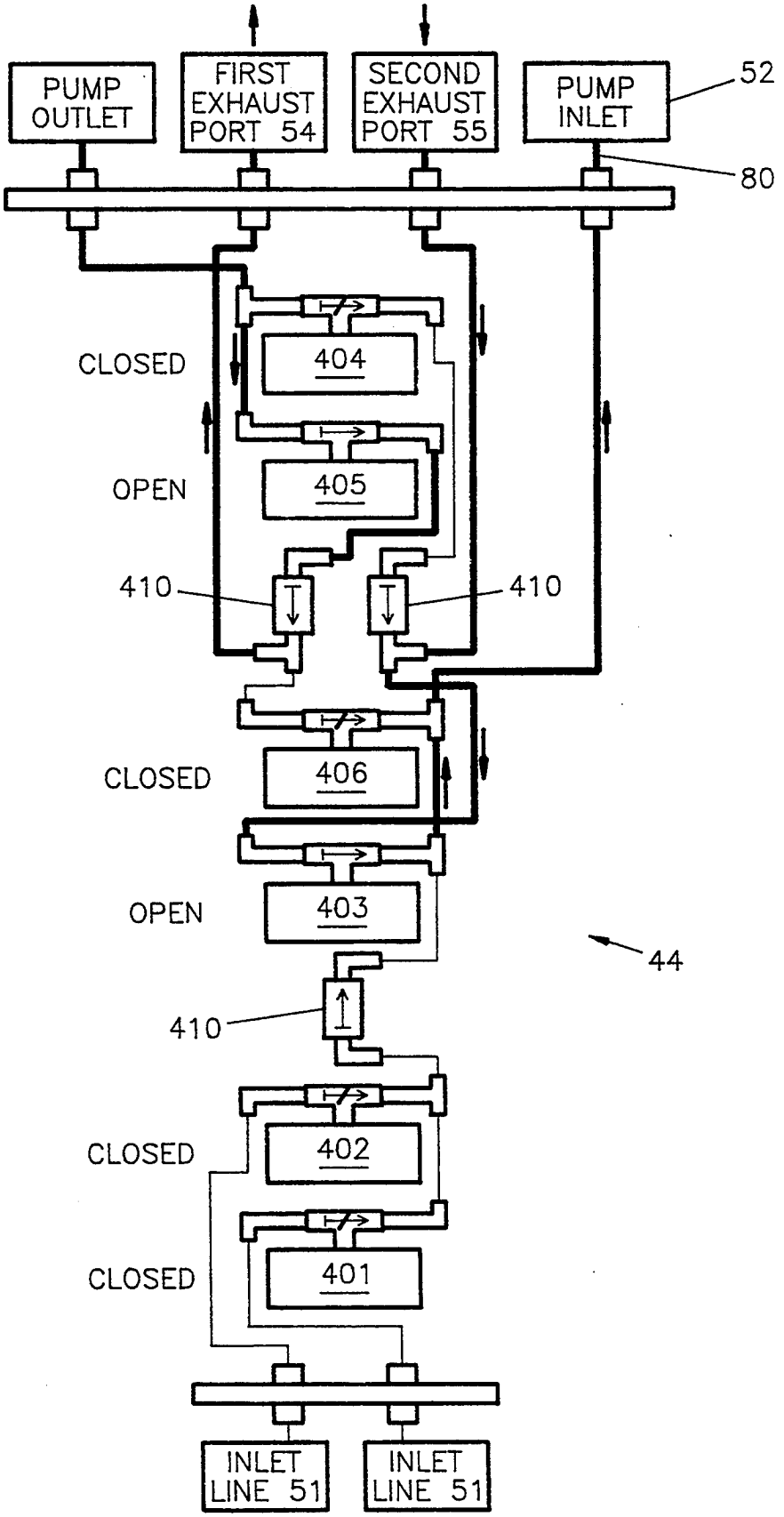
PUMP OUTLET
FIRST EXHAUST PORT 54
SECOND EXHAUST PORT 55
PUMP INLET
52
80
CLOSED
404
OPEN
405
410
410
CLOSED
406
OPEN
403
44
410
CLOSED
402
CLOSED
401
INLET LINE 51
INLET LINE 51

FIGURE 6

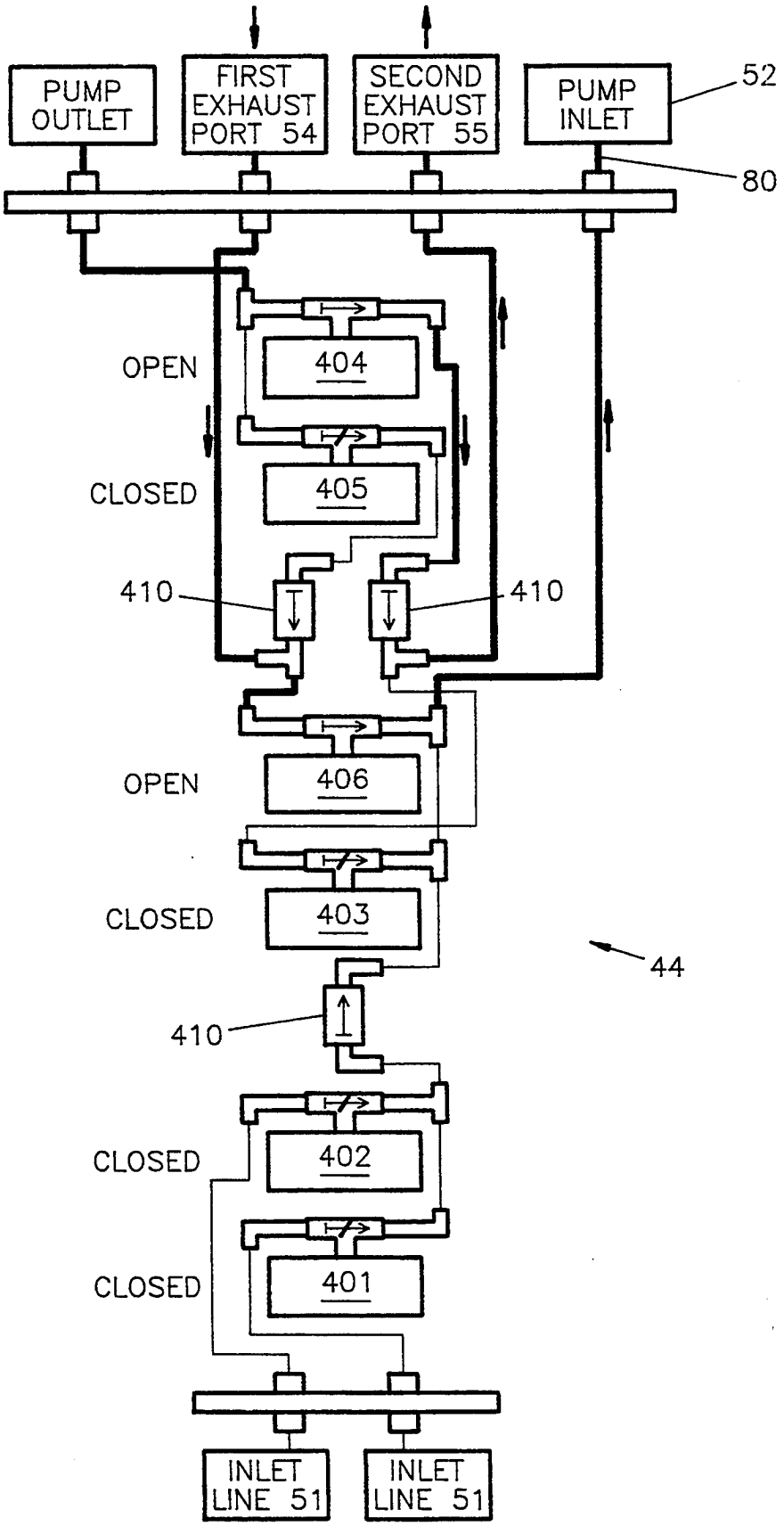
PUMP OUTLET
FIRST EXHAUST PORT 54
SECOND EXHAUST PORT 55
PUMP INLET
52
80
OPEN
404
CLOSED
405
410
410
OPEN
406
CLOSED
403
44
410
CLOSED
402
CLOSED
401
INLET LINE 51
INLET LINE 51

FIGURE 7

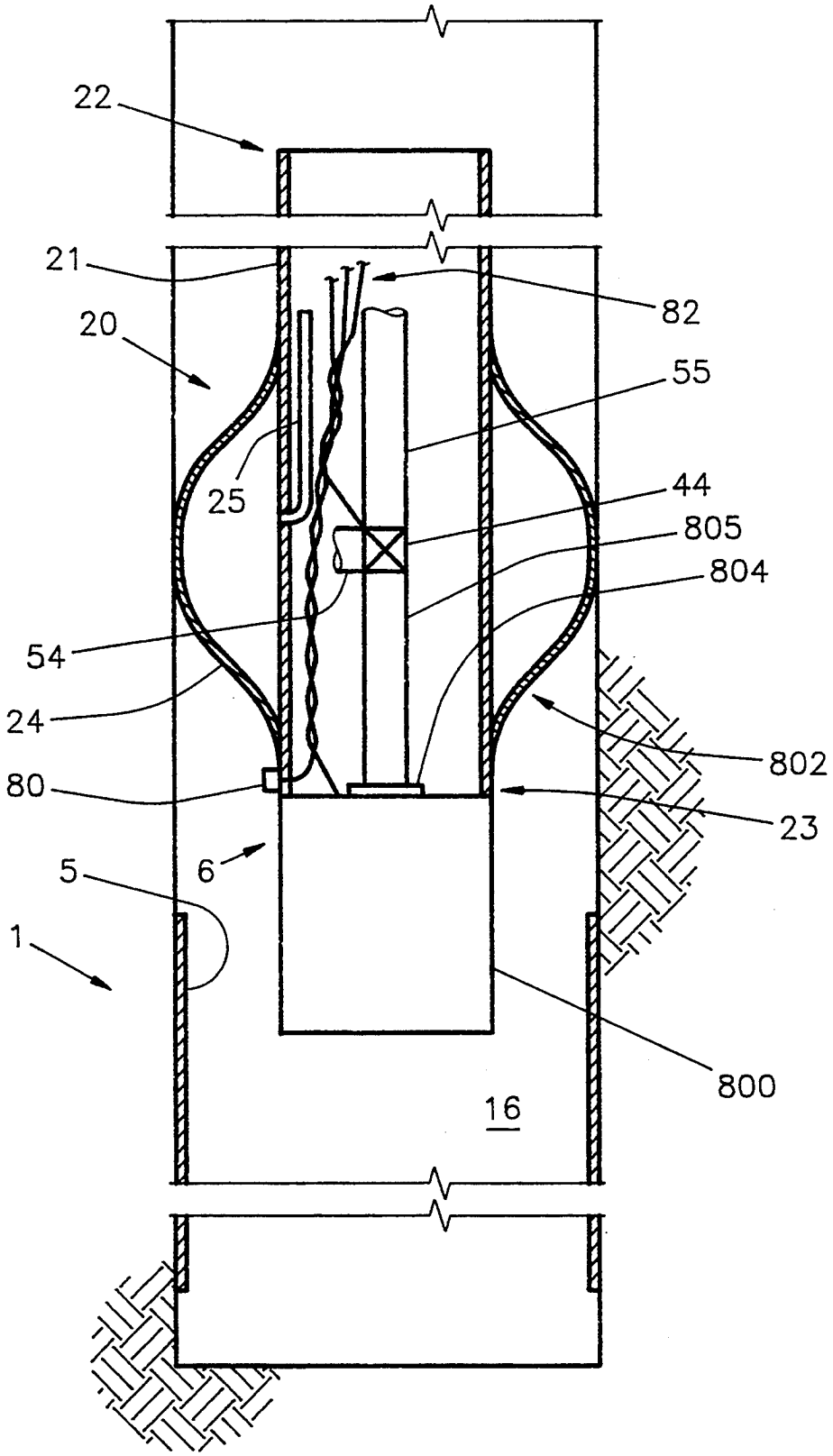

FIGURE 8

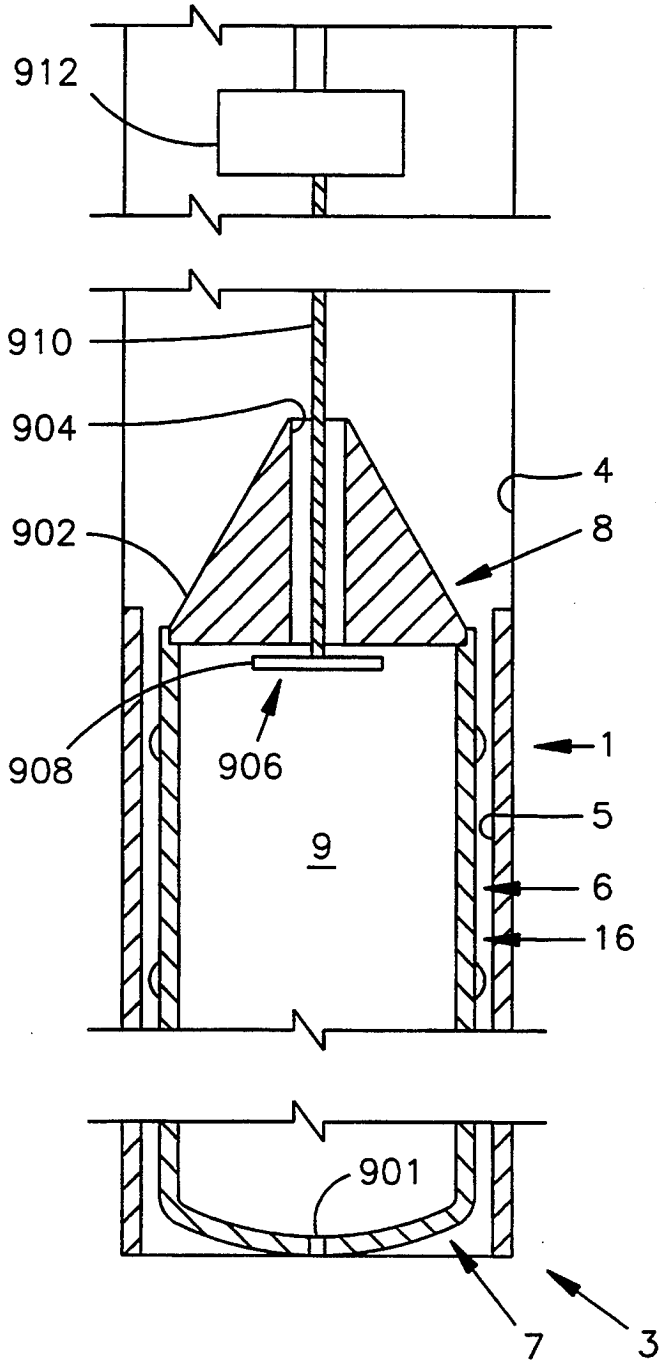

FIGURE 9

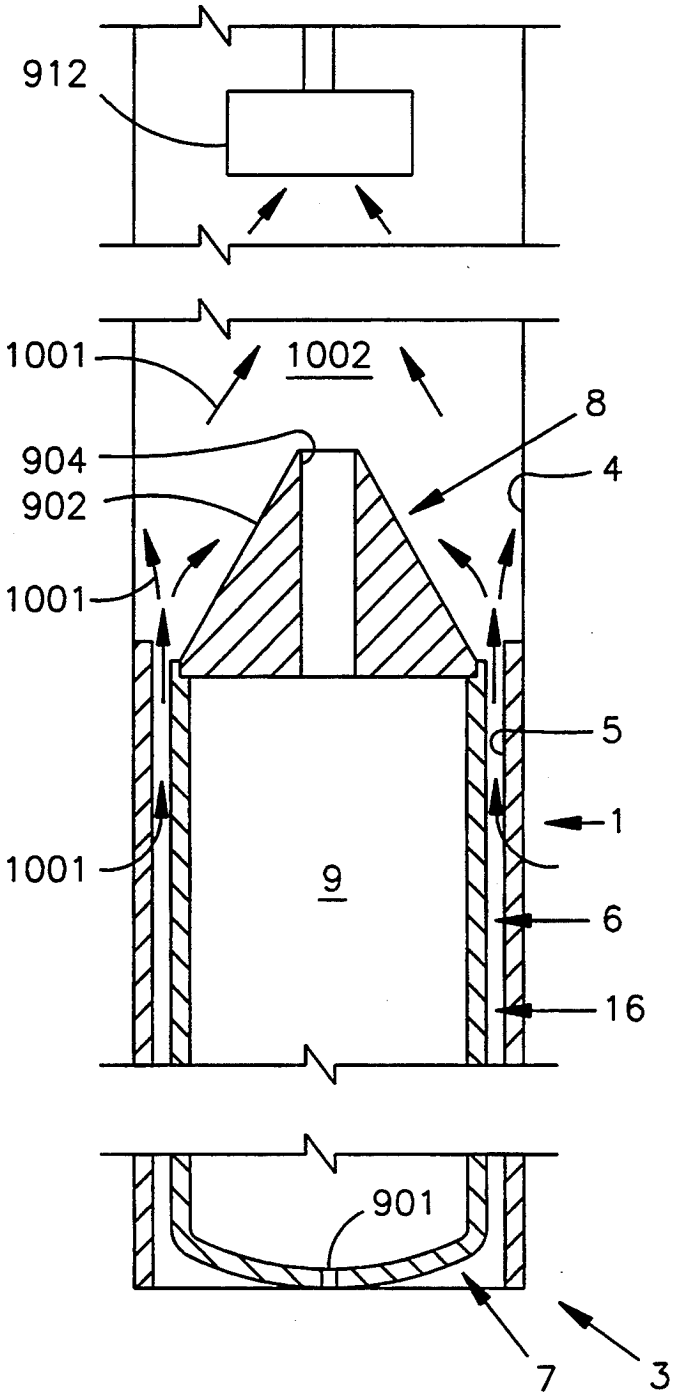

FIGURE 10

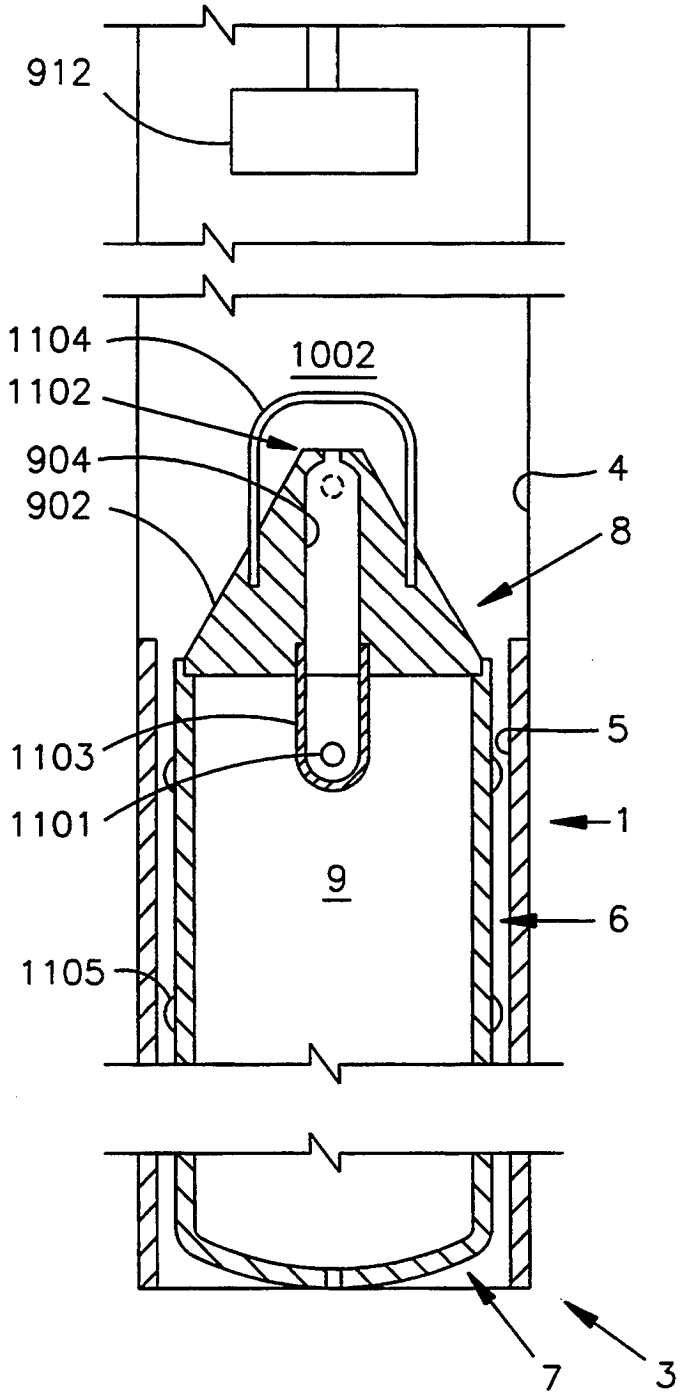

FIGURE 11

WELL FLUID ISOLATION AND SAMPLE APPARATUS AND METHOD

This patent application is a continuation-in-part of application Ser. No. 08/112,726, filed Aug. 26, 1993 now abandoned.

FIELD OF THE INVENTION

The present invention relates generally to an apparatus and method for obtaining well fluid from a well. More specifically, the invention is a method and apparatus for purging and/or sampling well fluid wherein the apparatus is an isolation assembly that minimizes the amount of fluid discharged for purging and/or sampling.

BACKGROUND OF THE INVENTION

Sampling the contents of a well is commonly done for purposes ranging from bacterial analysis of potable water wells to chemical analysis of oil and gas supply wells. With increased environmental protection regulations, more sampling wells, particularly water wells, have been drilled.

Prior to sampling a well, the standing fluid must be removed or purged so that what is sampled is fresh fluid influx to the well rather than stagnant fluid. Because fluid extracted from a well may become contaminated, it is preferred to avoid re-injecting the fluid into the well. Moreover, if the fluid is already contaminated (hence the reason for taking the samples) it is preferred to contain the contamination and not spread it by dumping it on the ground. In the United States, extracted well fluid is prohibited by regulation from being re-injected into the well or dumped onto the ground. Hence, handling the volume of purged fluid adds significant expense to the sampling procedure and as more sampling is done, the cost rises proportionately.

Present methods of purging involve removing two to four well volumes into a container. If sampling must be done more than once, with extended period of time between sampling, the well must be purged prior to each sampling. Thus, there is a need in the well sampling industry for a means and method of purging and sampling that would reduce the amount of water taken from wells for purposes of sampling.

SUMMARY OF THE INVENTION

The present invention specifically permits purging and/or sampling of a well but only removing, at most, about 25% of the fluid volume compared to conventional methods and, at a minimum, removing none of the fluid volume from the well.

The invention is an isolation assembly that is inserted into the well. The isolation assembly is designed so that a volume of fluid between the outside diameter of the isolation assembly and the inside diameter of the well over a fluid column height from the bottom of the well to the top of the active portion (lower annulus) is removed. In embodiments having a packer, pump means and exhaust direction means, the packer is positioned above the active portion thereby sealing the well and preventing any mixing or contamination of inlet fluid with fluid above the packer. Because the top of the isolation assembly may be open and well fluid may enter therein but is prevented from entering the lower annulus, and although well fluid within the isolation assembly may literally be below the packer, the phrase "above the packer" or "above the sealing means" as used herein is defined to mean the same as "excluded from the lower annulus". In its broadest sense, that definition can include well fluid in an isolation chamber. Where an internal seal exists between the isolation chamber and the packer unit, the phrase "above the packer" does not include the isolation chamber.

Ports in the wall of the isolation assembly permit purging and sampling of the lower annulus along the height of the active portion.

The subject matter of the present invention is particularly pointed out and distinctly claimed in the concluding portion of this specification. However, both the organization and method of operation, together with further advantages and objects thereof, may best be understood by reference to the following description taken in connection with accompanying drawings wherein like reference characters refer to like elements.

BRIEF DESCRIPTION OF THE DRAWINGS

FIG. **1** is a section view of a well showing deployment of the isolation assembly.

FIG. **2** is a section view of the isolation assembly.

FIG. **3** is a section view of the valve means.

FIG. **4** is a schematic of an embodiment of the exhaust direction means illustrating the second operational function or the first directional function.

FIG. **5** is a schematic of an embodiment of the exhaust direction means illustrating the third operational function.

FIG. **6** is a schematic of an embodiment of the exhaust direction means illustrating the first direction function.

FIG. **7** is a schematic of an embodiment of the exhaust direction means illustrating the fifth operational function.

FIG. **8** is a sectional view of a retrofit isolation assembly.

FIG. **9** is a sectional view of a simplified isolation chamber.

DESCRIPTION OF THE PREFERRED EMBODIMENT(S)

Referring to FIG. **1**, illustrated therein is a well **1** having a top opening **2**, a bottom **3**, an inner surface **4**, and an active portion **5**. The inner surface **4** may be earth, for example host rock or soil, or a casing of metal or plastic, and the active portion may be earth or a screened interval.

For purposes of purging and sampling, an isolation assembly **6** that is hollow and having a first end **7** and a second end **8** is inserted into the well **1** wherein the first end **7** is positionable near or in contact with the bottom **3** of the well **1** and the second end **8** is extendable above the active portion **5**.

The isolation assembly **6** has an isolation chamber **9** with a valve **10** mounted at or near the first end **7** for admitting well fluid into the isolation chamber **9**, a seal **12** for sealing between the inner surface **4** and the isolation assembly **6**, and at least one port **14** for admitting additional well fluid into the isolation assembly **6**.

During insertion of the isolation assembly **6**, the valve **10** may permit well fluid to enter the isolation chamber **9**. Upon locating the isolation assembly **6** in a final position in the well **1**, the valve **10** is closed and sealed thereby isolating the well fluid within the isolation chamber **9** thereby preventing mixing of fluid within the isolation chamber **9** with fluid in an annular space **15**

between the isolation chamber **9** and the inner surface **4** of the well **1**.

After insertion to the final position, the seal **12** is activated for sealing the annular space **15**. The seal is mounted near the second end **8** and positioned above the active portion **5** thereby isolating well fluid in a lower annulus **16** from below the seal **12** to the bottom **3** of the well **1** from well fluid above the seal **12**. (The lower annulus **16** includes volume between the first end **7** of the isolation assembly **6** and the bottom **3** of the well **1**.) With the isolation assembly **6** in place, the volume of well fluid within the isolation chamber **9** need not be removed from the well **1** for purposes of purging. The volume of well fluid to be purged is that within the lower annulus **16**.

In a well **1** having an inside diameter of 4.0 inches which would be the case for a nominal 4-inch schedule **40** casing, an isolation assembly **6** having an outside diameter of 3.5 inches results in a well fluid volume to be purged of about 23% of the total well volume assuming that the well fluid level is below the seal **12**. If instead, the nominal 4-inch well has a schedule **80** casing, then the inside diameter is 3.826 inches and the 3.5 inch diameter isolation assembly **6** results in a well fluid volume to be purged of about 9% of the total well volume. If the well fluid level is above the seal **12**, then there is further reduction in purge volume.

During purging or sampling at least one port **14** takes well fluid from the lower annulus **16**. The purged or sampled well fluid may be discharged to the surface and handled accordingly. Alternatively, regulations permitting, purged or sampled well fluid may be discharged into the volume above the seal **12**. In wells wherein the screened interval of the well has low permeability or that are located in an area regulations do not permit leaving the purged or sampled well fluid in the well, the purged or sampled well fluid may be discharged into a riser **17**, preferably an expandable riser. Expandable risers are disposed of more easily and for less cost than the cost of disposal and decontamination of rigid risers. If a riser is not used, and well fluid removal is needed, well fluid above the seal **12** can be removed at a convenient time for disposal. In wells not needing or requiring removal of purged or sampled well fluid, the purged or sampled well fluid may simply flow back toward the bottom **3** of the well **1** upon release of the seal **12**.

After purging and/or sampling, the isolation assembly **6** may be removed from the well **1**. Removal is facilitated by a pressure equalization port **18** that permits the valve **10** to open and permit well fluid to drain from the isolation chamber **9**.

Isolation Assembly

In FIG. **2**, further detail of the isolation assembly **6** is provided. The isolation assembly **6** generally has four subsections, packer unit **20**, spacer unit **30**, operational unit **40**, and isolation unit **71**. Units are connected with a coupler **60**, wherein the coupler **60** is preferably a threaded coupling.

The packer unit **20** has a packer housing **21**. The packer housing **21** may be made of any hollow material but is preferably schedule **80** polyvinyl-chloride (PVC) pipe. The packer housing **21** has an open end **22** and a coupling end **23**. The coupling end **23** may be of any suitable geometry permitting connection with the spacer unit **30**, but preferably has a thread machined on the external surface of the coupling end **23**. Mounted on the exterior of the packer housing **21** is a packer **24**. The packer **24** may be any type of packer including but not limited to mechanical packers, fluid inflated packer, disposable packer or compression packer. Preferably, the packer **24** is a fluid inflated packer made of an elastomeric material. Such packers may be obtained from Aardvark Corporation, Puyallup, Wash. A packer inflation line **25** is provided.

The spacer unit **30** has a housing **31** with a first end **32** and a second end **34**. The first end **32** connects with the coupling end **23**. Thus, the first end **32** preferably has internal threads connectably compatible with the external threads on the coupling end **23**. The second end **32** preferably has an external thread. While FIG. **2** shows a single spacer length, it will be appreciated by those skilled in the art that the spacer **30** may be of any length or may contain several lengths of housing **31** with connectable ends. The purpose of the spacer **30** is to place the packer **24** above the active portion **5** while the first end **7** of the isolation assembly **6** rests near or on the bottom **3** of the well **1**.

The operational unit **41** has a housing **41** connectable to the spacer unit **30** preferably in the same manner as the spacer unit **30** connects to the packer unit **20**. Within the operational unit **40**, is a pump **42** and exhaust director **44**. Further, a top bulkhead **46**, center bulkhead **47**, and bottom bulkhead **48** are optionally used to seal a pump chamber **49**, and a exhaust chamber **50**. One or more inlet lines **51** direct well fluid from the lower annulus **16** to the exhaust director **44** and thence to the pump inlet **52**. The pump **42** exhausts back through the exhaust director **44** and thence either to a first exhaust port **54** or a second port **55**. The first exhaust port **54** directs well fluid through the interior of the spacer and packer units **30** and **20** respectively and to the well volume above the packer **24**. The second port **55** is a transport tube that directs well fluid to the top of the well **1**.

The isolation unit **70** has a housing **71** with at least one end connectable with other units. It will be apparent to those of skill in the art that the isolation unit **70** may be of any length or have one or more isolation units **70** with both ends connectable thereby permitting locating one or more ports **74** at predetermined height(s) above the bottom **3** of the well **1**. The isolation unit **70** resting near or on the bottom **3** of the well **1**, has an end **7** with the valve **10**. The isolation chamber **9** is defined by the interior space from below the bottom bulkhead **48** to above the valve **10**.

When an internal bulkhead is present, pressure equalizer port **18** is provided in the isolation unit **70** near connection with the operational unit **40** so that upon release of the packer **24**, the well fluid within the isolation chamber **9** would be able to drain through the valve upon the pressure equalizer port **18** breaching the water level within the well **1**. Pressure equalization may be achieved by any means, but is preferably a float valve that opens when the float is in air above a well fluid level.

Sensors **80** for measuring well fluid characteristics could be mounted in any location within or without the isolation assembly **6**. For example, they could be located on either the inlet side or exhaust side of the pump **42** or within the isolation unit **70**. Sensors **80** are however preferably mounted within the operational unit **40** in a manner permitting contact with well fluid prior to well fluid entry into the pump **42**. Placement of sensors within the operational unit **40** permits keeping all electrical wiring within a particular unit which simplifies

manufacture, assembly, and operation. Placement of sensors prior to pump inlet **52** avoids any sample interaction with the pump **42**.

An electrical bundle **82** is provided for providing electricity to the pump **42**, exhaust director **44**, and the sensors **80**.

The valve **10** can be any type of valve including but not limited to electrically actuated, pneumatically actuated, and mechanically actuated valves. It is preferred to use a mechanically actuated valve to eliminate the need to run a line, either electrical or fluidic, to the valve **10** location.

Valve Detail

Further detail of a preferred embodiment of the valve **10** is provided in FIG. **3**. In this embodiment, valve **10** has a sealable bulkhead **310** and a slidable stem **320**. The sealable bulkhead **310** is connectable to the valve end **73** of housing **71** preferably threadably connectable with the valve end **73** with internal threads on the housing **71** valve end **73** and external threads on a bulkhead disk **311**. The bulkhead disk **311** has at least one hole **312** for flow of well fluid. In addition, a center hole **313** has a guide tube **314** mounted therein.

The slidable stem **320** has a first end **321** with a cap **322** mounted thereon. An elongate section **323** extends from the first tube end **321** through the guide tube **314** and below the bulkhead disk **311**. Below the bulkhead disk **311** a sealing disk **324** is attached to the elongate section **323**. An elastomeric ring **325** is mounted on the sealing disk **324** wherein the elastomeric ring **325** contacts the bulkhead disk **311** forming a seal and preventing flow of well fluid through hole(s) **312**. The elongate section **323** further extends to a second tube end **326** having a closure disk **327** mounted thereon. The closure disk **327** prevent well fluid from entering the elongate section **323** and bears on the bottom **3** of the well **1**. The cap **322** also prevents well fluid from entering the elongate section **323** and bears on the guide tube **314** thereby preventing the slidable **1**stem **320** from falling through the sealable bulkhead **310**.

It will be apparent to those skilled in the art that the valve **10** can be made in many ways other than depicted in FIG. **3**. For example, a hinge valve could be used instead of a slidable valve. Alternatively the sealable bulkhead **310** could be made to slide within the housing **71** past holes in the side of the housing **71**. Further, a sealing disk **324** may be rigidly mounted within housing **71** with the elastomeric ring **325** on the downward facing side of the sealing disk **324**. Holes would be added to the sealing disk **324** to permit flow of well fluid.

Exhaust Director

It will be understood by those skilled in the art that the exhaust director **44** may be any combination of one-way and/or multi-way valves having any type of remote actuation. In the following description, an operative preferred embodiment is described in terms of solenoid actuated one-way valves connected by tubes. This operative preferred embodiment fits within the operation unit **40** using readily available solenoid valves and tubing. As a practical expedient, check valves **410** are included to prevent closed solenoid valves from being forced open by pump pressure.

However, exhaust director **44** may be constructed from a solid piece of material wherein flow passages are machined therein and threaded holes are provided for installation of solenoid valves. Yet further, the exhaust director **44** could be constructed as a large rotary valve or series of rotary valves wherein simply rotating a valve control stem to a particular location would provide the proper valve and flow passage arrangement for a particular direction function. Moreover, check valves are not necessary if valves are used having sufficient resistance to system pump pressure. It will be recognized that many modifications to the operative preferred embodiment are possible that perform essentially the same function of selectively drawing well fluid in essentially the same way of directing well fluid through tubing, valve(s), and pump, to achieve essentially the same result of purging and/or sampling.

The exhaust director **44** needs a minimum capability as defined by four one-way valves for a pump having a tubular inlet and for a single inlet line. Valve capability corresponding to five one-way valves is needed for pump having a flooded inlet. With valve capability defined by four or five one-way valves, five basic operational functions are provided with a single inlet line **51**. Additional valve capability as defined by a one-way valve is needed for each additional inlet line **51**. FIG. **4** is a schematic of one-way solenoid valves with two inlet lines **51**. Inlet valve **401** is for one of the inlet lines, and inlet valve **402** is for the other inlet line. Exhaust valve **403** is used in combination with purge valve **405** for purging exhaust port **55** by emptying the well fluid contents therein into the first exhaust port **54**. Sample valve **404** for collecting well fluid samples from the lower annulus **16** and directing them to the second exhaust port **55**. Purge valve **405** is for purging the lower annulus by removing well fluid to the first exhaust port Extraction valve **406** is used only with sample valve **404** for removing well fluid from above the packer **24** to the second exhaust port **55** that may terminate above the top of the well.

The first operational function is no flow for storage or installation of the isolation assembly **6**.

The second operational function is removal of well fluid from the lower annulus **16** through inlet line(s) **51** via pump **42** and thence to the first exhaust port **54**. This direction function is referred to as purge or purging. Again, with reference to FIG. **4**, the valves are arranged to accomplish a purge of the lower annulus **16**. Sample valves **401** and **402** are open while valves **403**, **404**, and **406** are closed. Well fluid is drawn through samples valves **401** and **402** to the pump inlet **52**. The pump exhausts the well fluid through open purge valve **405** to the first exhaust port **54**.

The third operational function, sample collection is shown in FIG. **5**. While mixed samples from multiple sample lines **51** is permissible, a single sample line sampling is illustrated. Sample valve **401** is open to receive a sample of well fluid from the lower annulus **16**. The sample is drawn past sensor(s) **80** upstream of the pump inlet **52**. The pump discharges through sample valve **404** to the second exhaust port **55**. The purpose of discharging to the second exhaust port **55** is so that additional analyses may be done either for confirmation of sensor(s) **80** or complimentarily to information provided by sensor(s) **80**. Valves **402**, **403**, **405**, and **406** remain closed during sample collection.

The fourth operational function, sample tube purge, requires two direction functions. The purpose of this operational function is to remove well fluid remaining in the second exhaust port **55** and in the inlet line(s) **51** from previous sampling activity in preparation for ob-

taining new fresh sample(s). The first direction function is illustrated in FIG. **6** wherein well fluid is drawn from the second exhaust port **55** through exhaust valve **403** to the pump inlet **52**. The second direction function is a purge of the inlet line(s) **51** according to the second operational function as described above. The reason that separate purging of the second exhaust port **55** and of the inlet line(s) **51** is provided is for pump **42** that have an open or flooded inlet. Pump **42** having a closed or tubular inlet would permit a single purge of inlet and exhaust lines.

The fifth operational function is removal of well fluid from above the packer **24** to above the well, or purged well fluid extraction. If purged well fluid is stored within a riser, then the option exists for simply closing the riser and removing it from the well, or removing riser and isolation assembly **6** then closing the riser and separating it from the isolation assembly **6**. If, on the other hand, purged well fluid is stored in the well above the packer **24**, then purged well fluid may be removed as illustrated in FIG. **7**. Well fluid is drawn from the first exhaust port **54** through extraction valve **406** to the pump inlet **52**. The pump exhausts through sample valve **404** to the second exhaust port **55** and thence to the top of the well.

Retrofit Isolation Assembly

For applications in which it is desirable to utilize a pump that may already be present in the well **1**, the isolation assembly **6** may be simplified as depicted in FIG. **8**. In these applications, the isolation assembly **6** is made up of existing pump **800** and an assembly kit **802**.

The existing pump **800** may be any type of pump, but is preferably a centrifugal pump so that well fluid may drain through the pump **800** when it is not operating. If existing pump **800** is a type of pump that does not so drain, an additional valve in the exhaust director **44** may be needed.

The assembly kit **802** has a packer unit **21** and an exhaust director **44**. The packer unit may be of any type, but is preferably an inflatable packer **24** as shown in FIG. **8**. The inflatable packer **24** is mounted on packer housing **21**. The exhaust director **44** has the equivalent of two one-way valves, preferably a three-way valve, plus directional plumbing through which well fluid is received from pump exhaust **804**, then directed either to the first exhaust port **54** emptying either into a riser or directly into the well space above the packer, or to the second exhaust port **55** emptying to the top of the well **1**.

The packer housing **21** has an open end **22** and a coupling end **23**. Coupling may be to the pump **800** as shown in FIG. **8** or to the discharge pipe **805**. It will be appreciated by those skilled in the art of well sampling that many sealable couplings are useable for this purpose.

The three-way valve may be any type of three-way valve, but is preferably an electrically actuated three-way valve. In combustible environments, the three-way valve may be pneumatically or hydraulically actuated.

In certain wells, the bottom **3** may be much below an active portion **5** from which samples are desired. In these wells, the isolation assembly **6** may have a second packer **24** mounted on the isolation unit **70**, or in the case of a retrofit, a second packer assembly **20** would be added below the pump **800**. A valve **10** would be needed at the bottom of either the isolation unit **70** or the second packer assembly **20**. In this case, the valve **10** would be actuated by means other than by contact with the bottom of the well.

The isolation assembly has two basic operational functions. The first operational function is purging wherein well fluid is taken from the lower annulus **16** and discharged through the first exhaust port **54**. The second operational function is sampling wherein well fluid from the lower annulus **1** is discharged through the second exhaust port **55**. As an option, sensor(s) **80** may be placed on or below the packer housing **21**.

A yet further embodiment is an isolation assembly **6** having simply a packer unit **20** sealably attached to the pump **800** or a pump discharge pipe **805**. In this embodiment, the second exhaust port **55** would go to the top of the well and terminate with a flexible pipe or hose, while the first exhaust port **54** is absent. In this case, the flexible pipe or hose is the exhaust director **44** but has no valves per se. Flexible pipe includes but is not limited to jointed hard pipe, or bendable plastic, or composite material pipe or hose. For purging, the flexible pipe or hose is placed in the well bore, and well fluid is collected above the packer **24**. For sampling, the flexible pipe or hose is directed to a sample collection container. This embodiment is not preferred because additional purge volume is required to ensure purging of the exhaust port **55** volume.

Simplified Isolation Assembly

An isolation assembly having no packer is referred to as a simplified isolation assembly and is shown in FIG. **9**. The simplified isolation assembly is an isolation assembly **6** having a first end **6** and a second end **7** enclosing an isolation chamber **9**. A bottom hole **901** is provided in the second end **7**. The first end **8** is provided with an closure **902** having a top hole **904**.

The closure **902**, in cooperation with the hole **901** permits entry of water into the isolation chamber **9** as the isolation assembly **6** is lowered into the well **1**. Air in the isolation chamber **9** escapes through the top hole **904** as water enters through the bottom hole **901**.

The diameter of the bottom hole can range from a size barely permitting water to enter the isolation chamber up to the inside diameter of the isolation chamber. However, for bottom holes less than about $\frac{3}{8}$ inch in diameter, the mass flow of water through the hole is limited so that the amount of time for the isolation chamber **9** to fill and empty is excessive. For bottom holes greater than about 1 inch or a plurality of bottom holes, it is difficult to "seal" the hole(s) on the bottom **3** of the well **1**. Thus, it is preferred that the bottom hole be located near the center of the first end **7** and range in size from about $\frac{3}{8}$ inch to about 1 inch.

The diameter of the top hole **904** can be quite small, but should be of a size corresponding to the volume flow of air escaping therethrough as the volume flow of water entering the bottom hole **901**. In other words, the volume flow capacity of the top hole **904** for air is preferably equal to or greater than the volume flow capacity of the bottom hole **901** for water. Moreover, the top hole **904** preferably retards any flow of water from within the isolation chamber **9** to the water exterior to the isolation assembly **6** after the isolation assembly **6** is in place and full of water. Thus, although the top hole **904** can range in size from the minimum possible to permit passage of air molecules to the inside diameter of the isolation chamber **9**, it is preferred that the top hole **904** be from about 1/16 in. to about $\frac{1}{2}$ in. and more preferably about $\frac{1}{4}$ in.

Once emplaced in the well **1**, the isolation assembly **6** permits purging of well water from the lower annulus **16** while leaving substantially undisturbed the water within the isolation chamber **9**. A small amount of water from the isolation chamber **9** may diffuse through the top hole **9** into the well **1**. However, because the purging step is accomplished in less than about ½ hour and very often within about 10 minutes, the amount of diffusion is negligible. In wells wherein it is not possible to seal the bottom hole **901** at the bottom **3** of the well **1**, the foot valve **10** may be used in place of an open bottom hole **901**.

To facilitate emplacement and removal of the isolation assembly, a T-bar **906** may be used having a 'T' or tee **908** attached to a cable **910** passing through the top hole **904**. The cable **910** may be attached to the pump **912** or run up to the surface of the ground.

Operation of the simplified isolation chamber is shown in FIG. **10**. The arrows **1001** show the direction of water flow toward the pump **912** during purging and sampling. The closure **902** preferably has a shape permitting active flow throughout the region **1002** between the top **8** of the isolation assembly and the pump **912** and avoiding creation of stagnant zones within the region **1002**. A preferred shape is a cone, but it will be apparent to those skilled in the art that a spherical segment, elliptical segment, hyperbolic, quadratic, cubic, logarithmic or other curved segment either concave or convex may be applied to permit active flow. A closure **902** having a substantially horizontally flat surface could be used, but is less preferred because of the potential stagnant zone created near the center of the flat surface.

As a means to prevent diffusion or other flow from within the isolation chamber **9** to the region **1002**, a foot valve **10** may be used in place of the bottom hole **901** as previously mentioned, or a check valve may be used at the top hole **904**. If a check valve is used, then the T-bar **906** is replaced by another lifting handle. The check valve would be closed upon buoyant contact with water and opened upon lifting the isolation assembly and permitting water to escape.

An example of a check valve is shown in FIG. **11**. In this embodiment, a float **1101** is used in cooperation with a float seat **1102** to seal the closure **902**. A float container **1103** is provided to retain the float in proximity to the closure **902**. A bail **1104** replaces the T-bar **906** to avoid interference with the float **1001**. The top hole **904** is sized to be larger than the float **1101**. Instead of a float **1101**, a flap valve such as used in toilet flush apparatus or on SCUBA diving breathing apparatus may be mounted on the closure **902**.

In order to facilitate handling in a well, spacers **1105** may be placed on the exterior of the isolation assembly. The spacers may be hemispherical buttons, half moon shaped pieces or any variety of intermittent spacer.

Closure

While a preferred embodiment of the present invention has been shown and described, it will be apparent to those skilled in the art that many changes and modifications may be made without departing from the invention in its broader aspects. The appended claims are therefore intended to cover all such changes and modifications as fall within the true spirit and scope of the invention.

We claim:

1. An isolation assembly for obtaining well fluid from a well having a top opening, a bottom, an inner surface, and an active portion, wherein the isolation assembly comprises:

(a) an isolation chamber that is hollow having a wall, and insertable into the sampling well, the isolation chamber further having a first end positionable within the active portion of the well and a second end extendable above the active portion of the well;

(b) a valve for admitting a portion of the well fluid into the isolation chamber, said valve mounted on or near the first end, said valve also for sealing the portion of the well fluid within the isolation chamber thereby preventing mixing of well fluid within the isolation chamber with well fluid in an annular space between the isolation chamber and an inner surface of the well;

(c) a seal for sealing the annular space, said seal mounted near the second end and positioned above the active portion thereby isolating well fluid in a lower annulus from below said seal to the bottom of the well from well fluid above said seal;

(d) a port for admitting well fluid from the lower annulus into an inlet;

(e) a pump for pumping admitted well fluid from the inlet to an exhaust port; and

(f) a riser connected to a first exhaust port for collecting purged well fluid.

2. The isolation assembly as recited in claim **1**, wherein obtaining well fluid is purging or sampling the well fluid.

3. The isolation assembly as recited in claim **1**, further comprising:

(g) a sensor for characterizing the admitted well fluid.

4. The isolation assembly as recited in claim **1**, further comprising:

(g) an exhaust director permitting selection of an operational function with selected flow paths.

5. The isolation assembly as recited in claim **4**, wherein said pump and said exhaust director are mounted in a housing forming an operational unit.

6. The isolation assembly as recited in claim **1**, wherein said seal comprises:

(h) a packer unit.

7. The isolation assembly as recited in claim **6**, wherein said packer unit comprises:

(i) a housing with an open end and a coupling end;

(j) a packer mounted on the housing; and

(k) a packer inflation tube for pressurizing the packer.

8. The isolation assembly as recited in claim **1**, further comprising:

(l) an exhaust director permitting selection of an operational function with selected flow paths;

(m) an operational unit having a housing wherein are mounted said pump and said exhaust director; and

(n) said seal comprising a packer unit having a packer housing with an open end and a coupling end, with a packer mounted on the packer housing.

9. The isolation assembly as recited in claim **8**, further comprising:

(o) a spacer unit placed between and connected to the packer unit and the operational unit; and

(p) an isolation unit with a port for admitting well fluid mounted therein, and having said valve.

10. A method for obtaining well fluid from a well having a top opening, a bottom, an inner surface, and an active portion, wherein the method comprises the steps of:

(a) inserting an isolation chamber that is hollow and further having a first end and a second end, and positioning the first end within the active portion of the well and extending the second end above the active portion of the well;

(b) admitting a portion of the well fluid into the isolation chamber and sealing the portion of the well fluid within the isolation chamber thereby preventing mixing of well fluid within the isolation chamber with well fluid in an annular space between the isolation chamber and an inner surface of the well;

(c) sealing the annular space with a seal near the second end and above the active portion thereby isolating well fluid in a lower annulus from below the seal to the bottom of the well from well fluid above said seal;

(d) admitting well fluid from the lower annulus into an inlet through at least one port mounted on the isolation chamber;

(e) pumping admitted well fluid from the inlet to an exhaust port; and

(f) storing purged well fluid in a riser.

11. The method as recited in claim **10**, wherein obtaining well fluid is purging or sampling the well fluid.

12. The method as recited in claim **10**, further comprising:

(g) sensing at least one characteristic of the admitted well fluid.

13. The method as recited in claim **10**, further comprising:

(h) selecting an operational function with an exhaust director permitting selection of flow paths.

14. An isolation assembly for obtaining well fluid from a well having a top opening, a bottom, an inner surface, and an active portion, wherein the isolation assembly comprises:

(a) an isolation unit that is hollow having a wall defining an isolation chamber, and insertable into the sampling well, the isolation unit further having a first end positionable within the active portion of the well and a second end extendable above the active portion of the well;

(b) a bottom hole for admitting water into said isolation unit of the first end, said bottom hole sealed by contact with the bottom of the well, thereby retarding mixing of well fluid within the isolation unit with well fluid from an annular space between the isolation unit and an inner surface of the well; and

(c) a closure on said second end, and a hole or pressure equalization port through said wall or said closure permitting escape of air from the isolation chamber.

15. The isolation assembly as recited in claim **14**, further comprising:

a foot valve in the bottom hole on said first end.

16. The isolation assembly as recited in claim **14**, further comprising:

a check valve on said closure.

17. The isolation assembly as recited in claim **14**, wherein the closure has a shape permitting active flow.

18. The isolation assembly as recited in claim **14**, further comprising:

a T-bar for emplacing and removing the isolation assembly within and from the well.

19. A method for obtaining well fluid from a well having a top opening, a bottom, an inner surface, and an active portion, wherein the method comprises the steps of:

(a) inserting an isolation unit that is hollow and further having a first end and a second end, and positioning the first end within the active portion of the well and extending the second end above the active portion of the well;

(b) admitting a portion of the well fluid into the isolation unit and containing the portion of the well fluid within the isolation chamber, thereby retarding mixing of the portion of the well fluid within the isolation chamber unit with well fluid from an annular space between the isolation unit and an inner surface of the well; and

(c) pumping well fluid from the annular space to an exhaust port.

20. The method as recited in claim **19**, further comprising:

(d) sensing at least one characteristic of the admitted well fluid.

* * * * *